Häfele Mansio BE40 Sofa

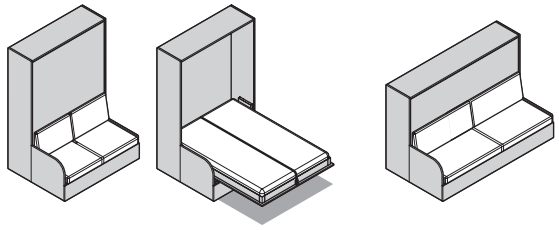

271.89.20x	271.89.10x
271.89.21x	271.91.02x
271.89.220	271.91.05x
271.89.222	271.91.08x
271.89.223	271.91.10x
271.89.230	271.91.5xx
271.89.231	

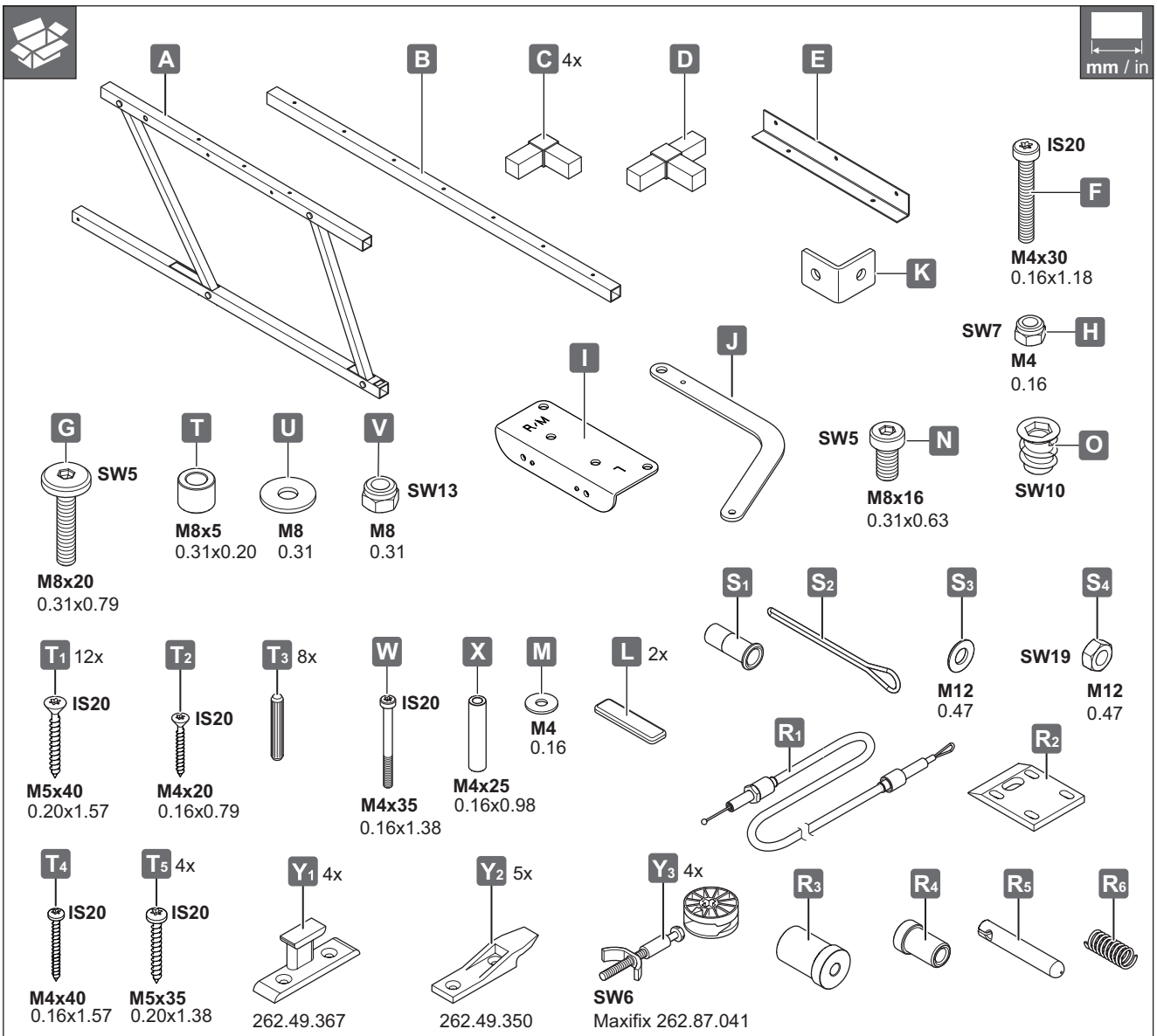

	A,G,I,J,T,U,V,W,X	B	D	E	F	H	K,M	N,O	T_2	T_4
B>1000 B>39.37	3x	4x	2x	1x	5x	8x	6x	9x	21x	35x
B≤1000 B≤39.37	2x	2x	-	-	2x	4x	4x	6x	16x	20x

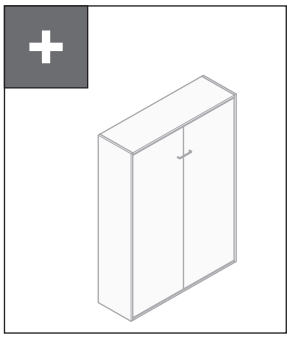

732.22.285

[WS494]

HDE 05.08.2026

mm / in

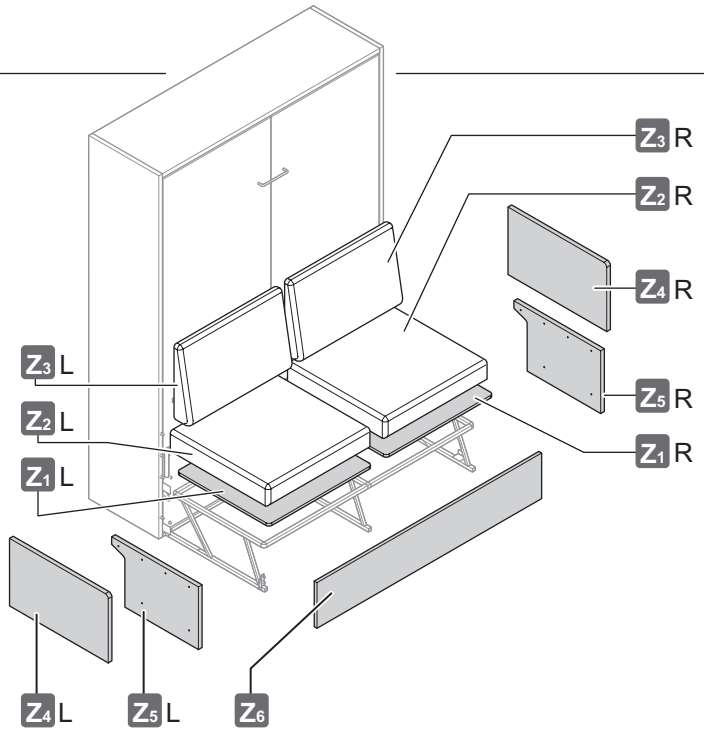

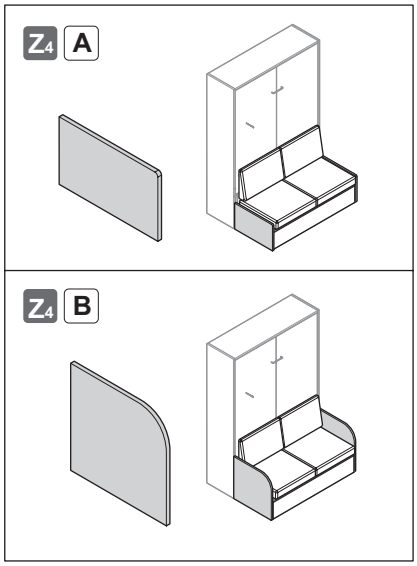

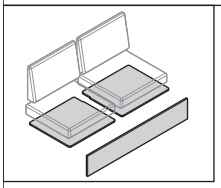

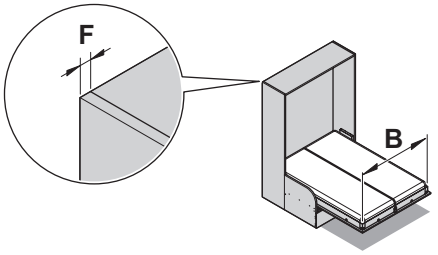

B	BL	BR
1370/53.94	**680**/26.77	**706**/27.80
1400/55.12	**695**/27.36	**721**/28.39
1530/60.24	**760**/29.92	**786**/30.94
1600/62.99	**795**/31.30	**821**/32.32
1800/70.87	**895**/35.24	**921**/36.26
1900/74.80	**945**/37.20	**971**/38.23
2000/78.74	**995**/39.17	**1021**/40.20
2030/79.92	**1010**/39.76	**1036**/40.79
Service+	**(B÷2)-5** / (B÷2)-0.2	**(B÷2)+21** / (B÷2)+0.83

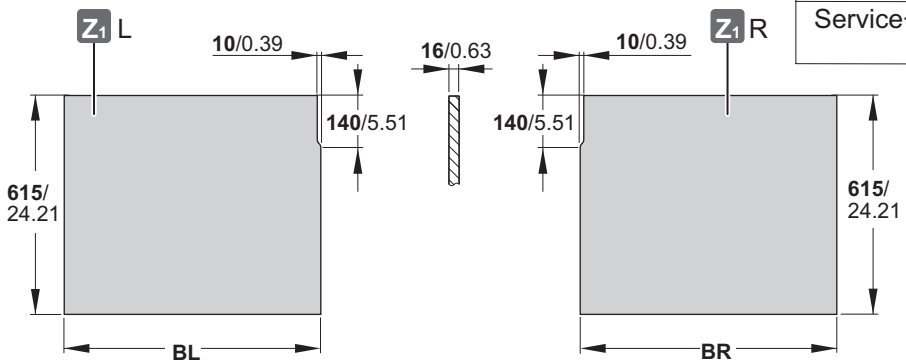

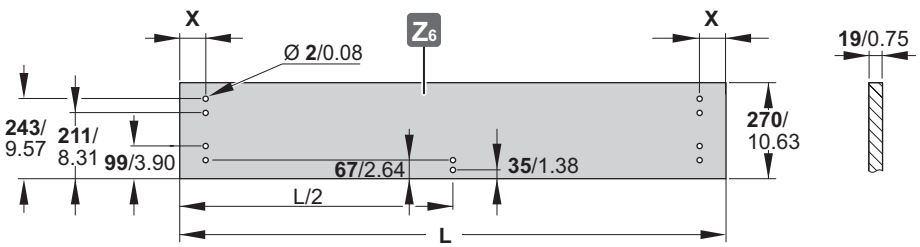

L = B + 86 + 2x F
L = B + 3.39 + 2x F

X = 37 + F
X = 1.46 + F

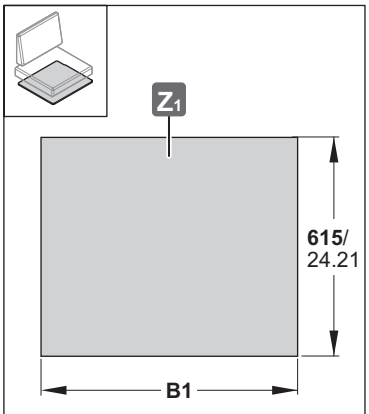

B	B1
1000/39.37	**1020**/40.18
900/35.43	**920**/36.22
Service+	**B+20**/B+0.79

732.22.285
[WS494]
HDE 05.08.2026

mm / in

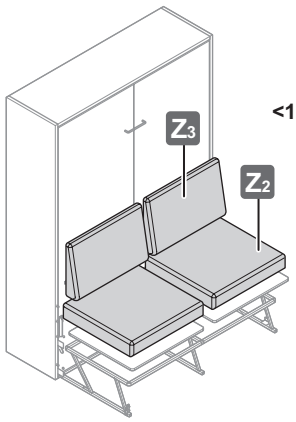

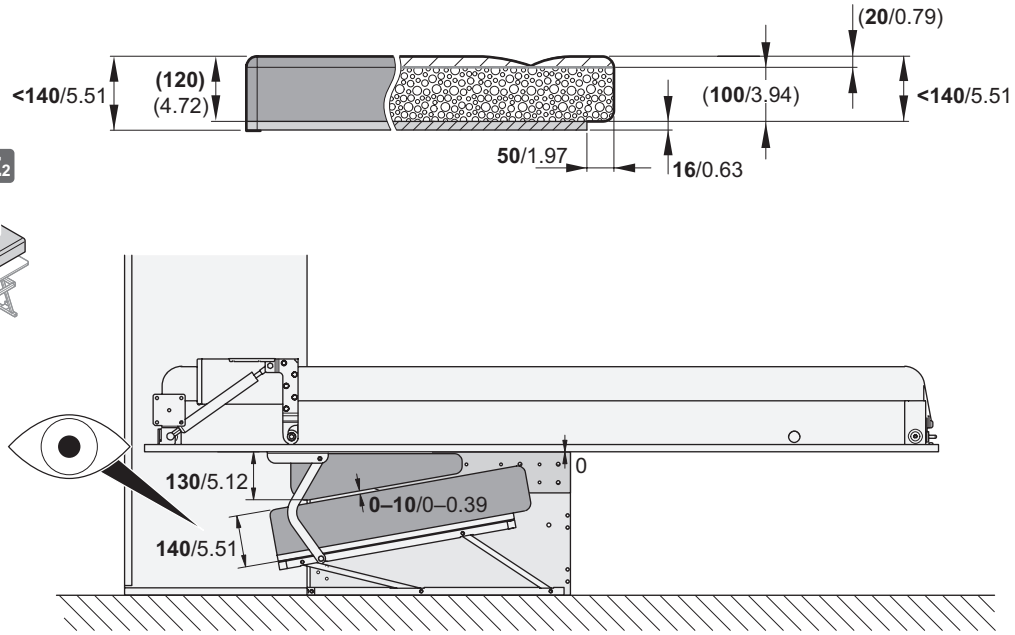

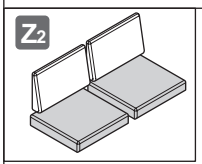

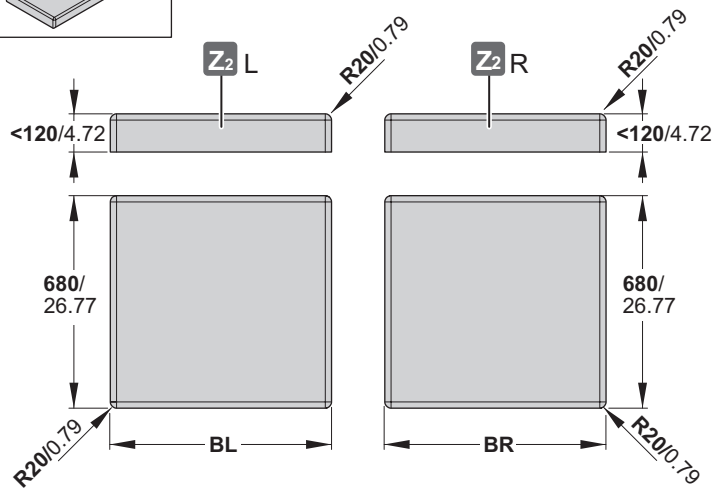

	Z2 Z3	Z2 Z3
B	**BL**	**BR**
1370/53.94	**682**/26.85	**708**/27.87
1400/55.12	**697**/27.44	**723**/28.46
1530/60.24	**762**/30.00	**788**/31.02
1600/62.99	**797**/31.38	**823**/32.40
1800/70.87	**897**/35.31	**923**/36.34
1900/74.80	**947**/37.28	**973**/38.31
2000/78.74	**997**/39.25	**1023**/40.28
2030/79.92	**1012**/39.84	**1038**/40.87
900/35.43	**920**/36.22	-
1000/39.37	**1020**/40.16	-
Service+ ≤**1000**/39.37	**B+20** / B+0.79	-
Service+ >**1000**/39.37	**(B÷2)-3** / (B÷2)-0.12	**(B÷2)+23** / (B÷2)+0.91

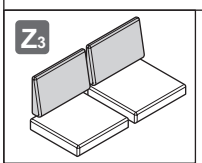

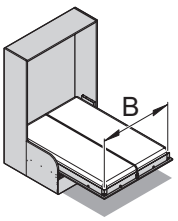

mm / in

Z4 A

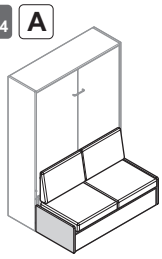

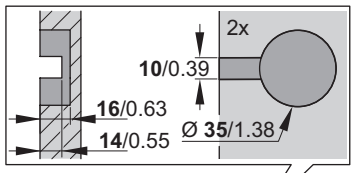

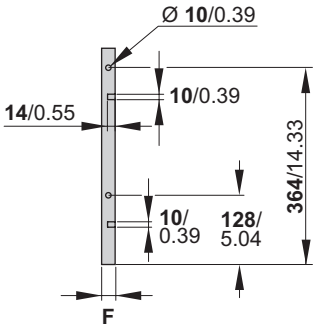

Z4 B

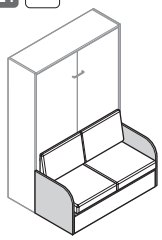

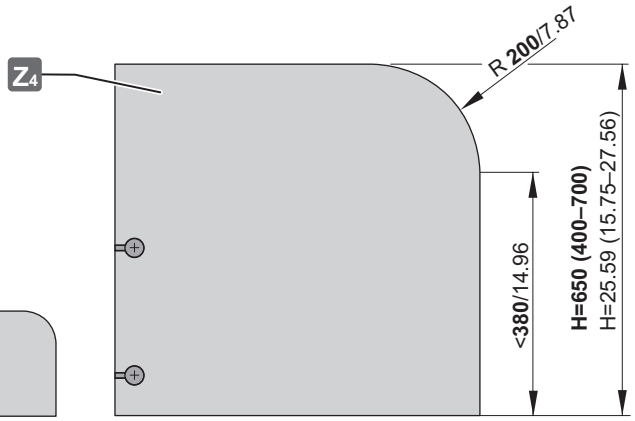

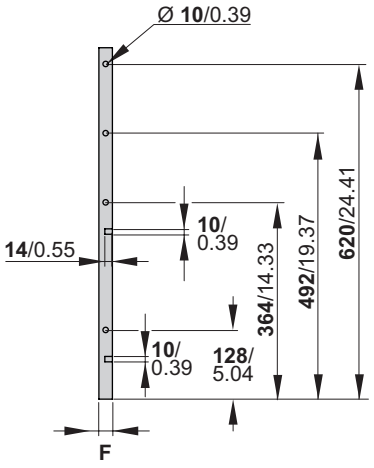

Z5

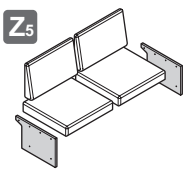

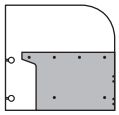

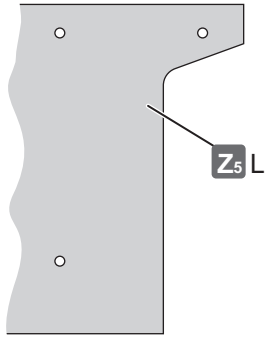

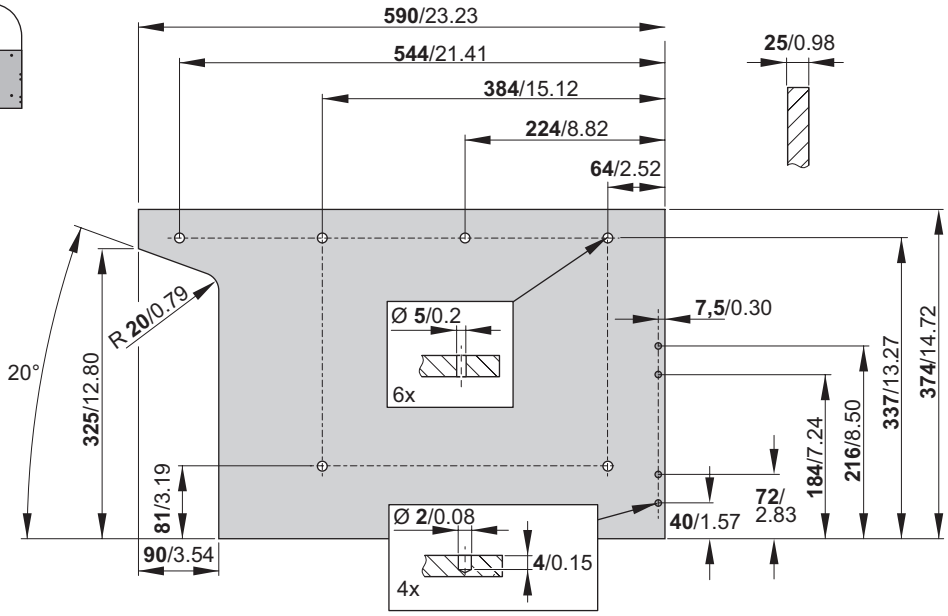

732.22.285
[WS494]
HDE 05.08.2026

1

mm / in

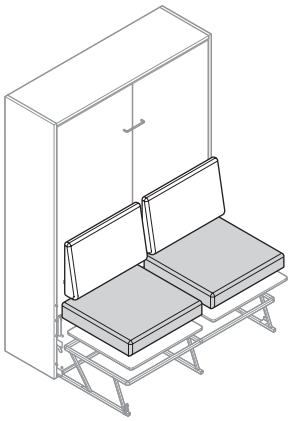

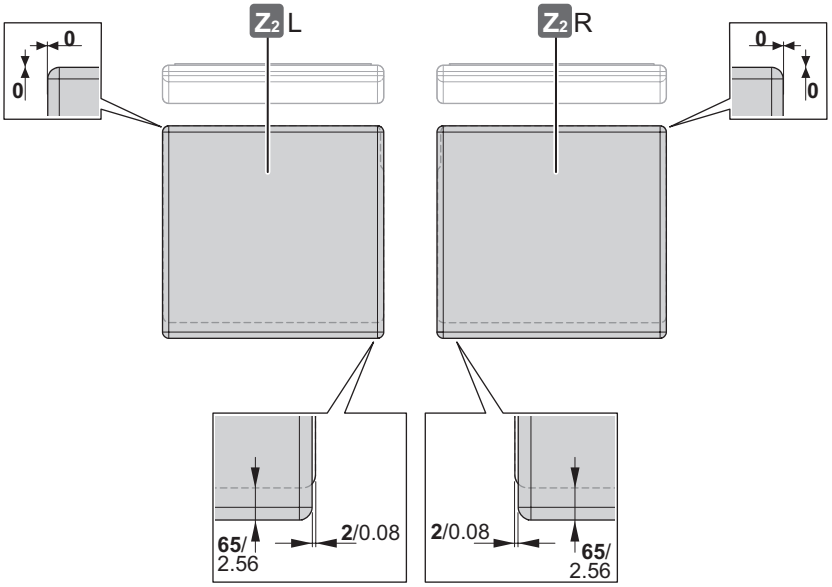

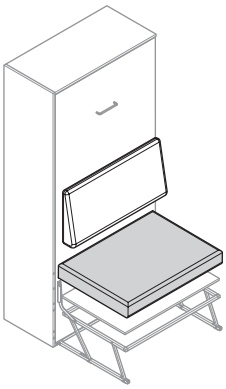

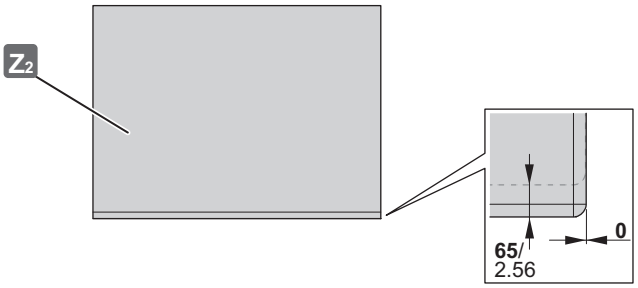

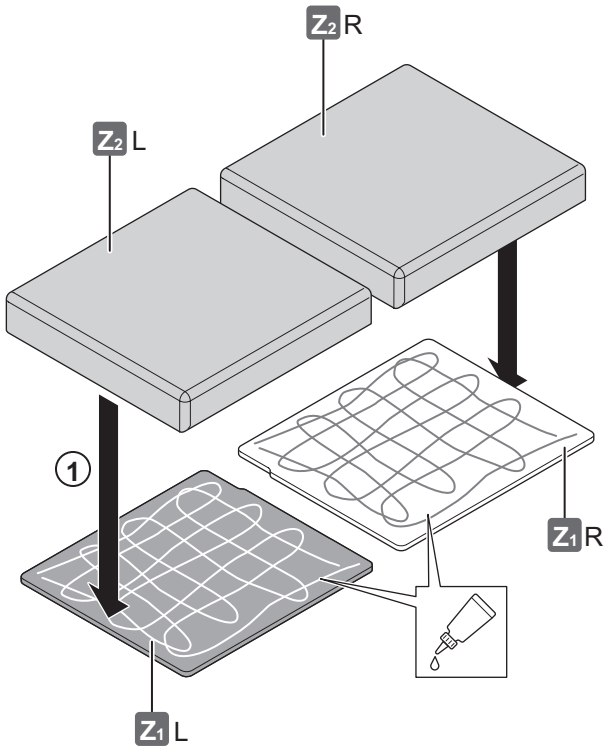

2A

IS20 SW7

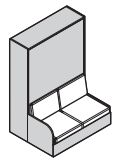

B>1000
B>39.37

3A

IS20 SW7

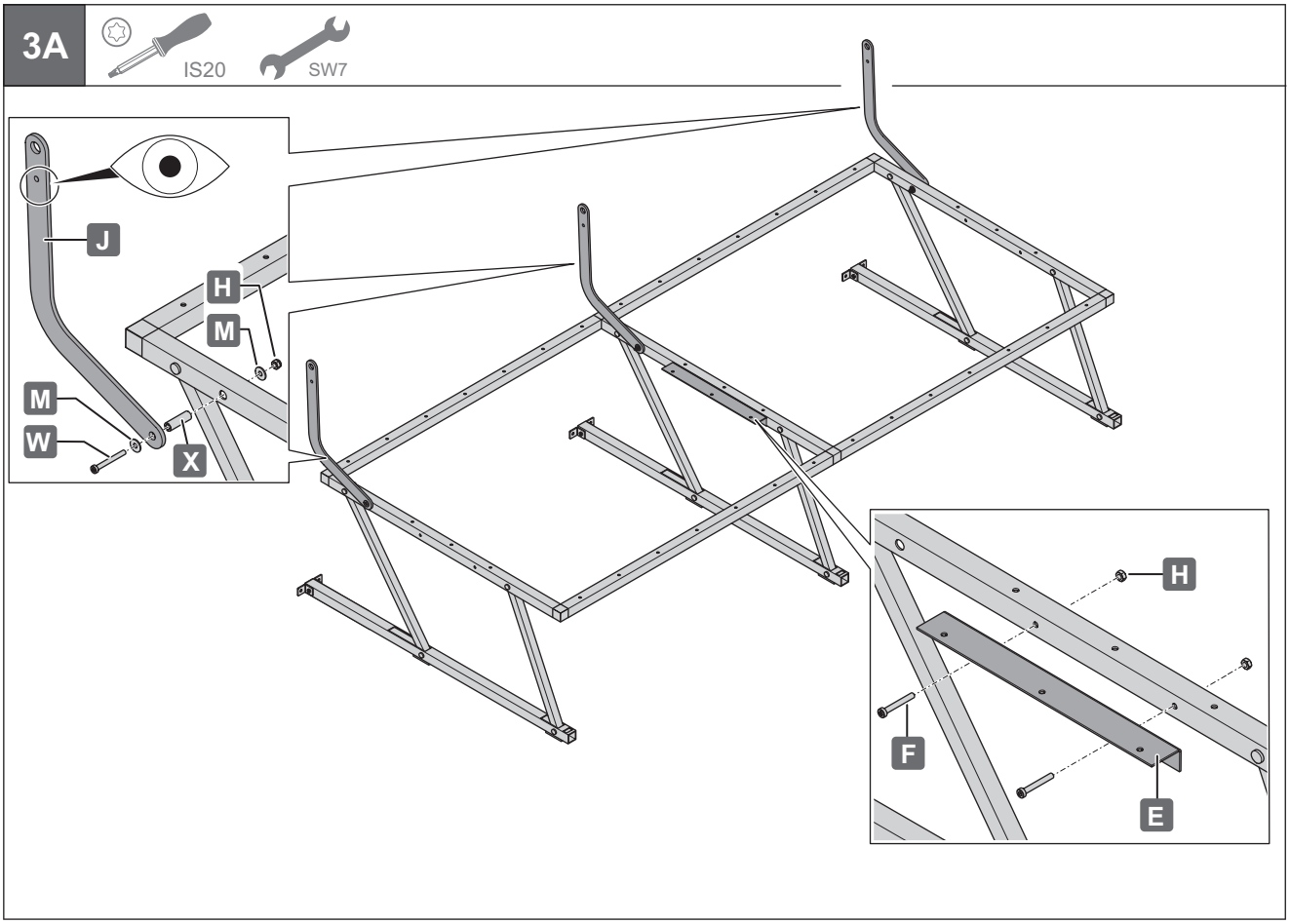

2B

IS20 SW7

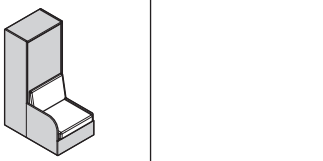

B≤1000
B≤39.37

3B

IS20 SW7

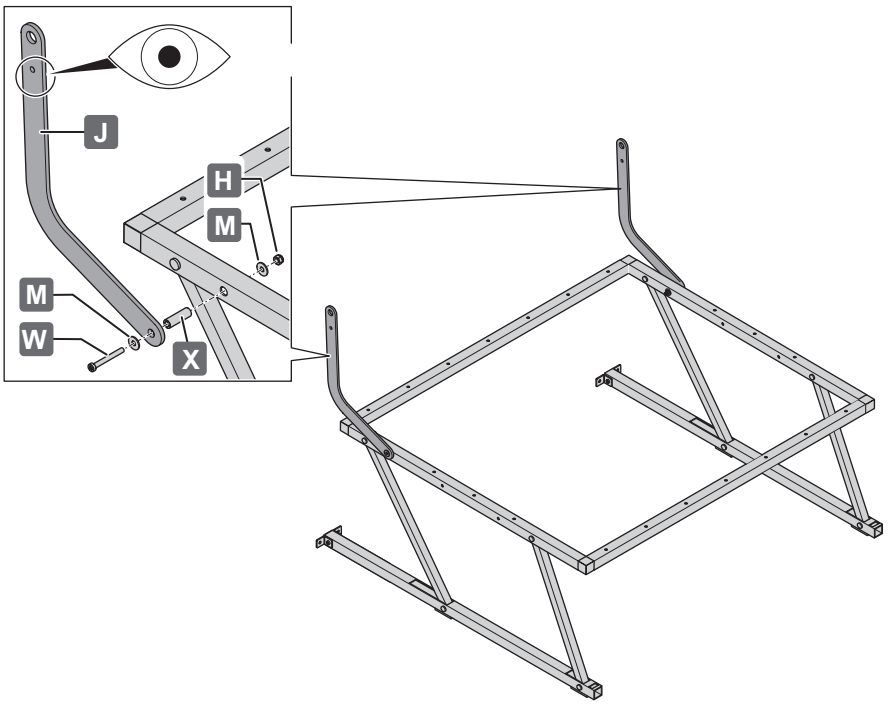

4A

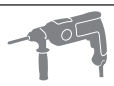







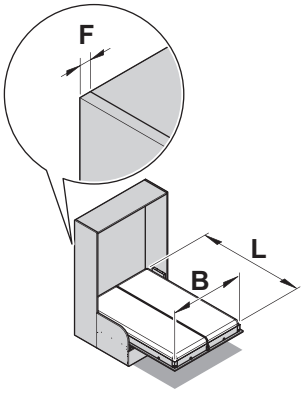

	B	L	A	C	D	W	Y	Z
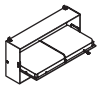	1900	1000/1370	412	472	512	956	926	150
	2000	1000	412	472	512	1006	976	150
	2000	1200	412	472	512	1006	976	150
	2000	1400	412	472	512	1006	976	150
	2000	1600	406	466	506	1006	976	200
	2000	1800	406	466	506	1006	976	300
	2030	1530	406	466	506	1021	991	200
	1370	1900	412	472	512	691	661	300
	1400	2000	412	472	512	706	676	400
	1530	2030	406	466	506	771	741	400
	1600	2000	406	466	506	806	776	400
	1800	2000	406	466	506	906	876	400
	2000	2000	406	466	506	1006	976	400
Service+	>1000		431-F	491-F	531-F	B÷2+6	B÷2-24	-
	≤1000		431-F	491-F	531-F	-	-	-
	900	2000	412	472	512	-	-	400
	1000	1900	412	472	512	-	-	300
	1000	2000	412	472	512	-	-	400

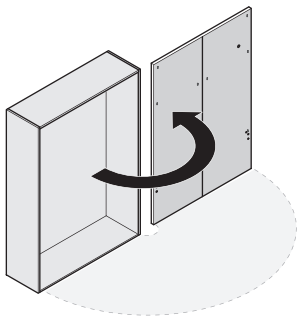

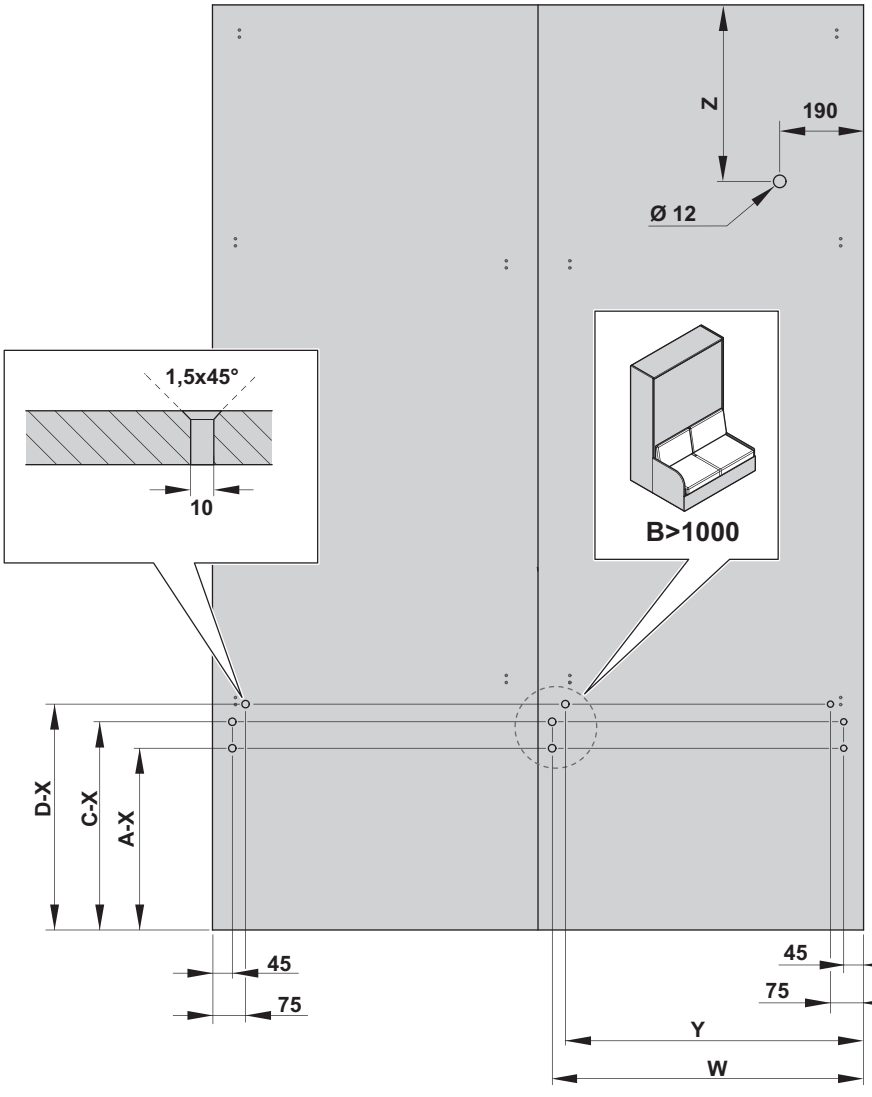

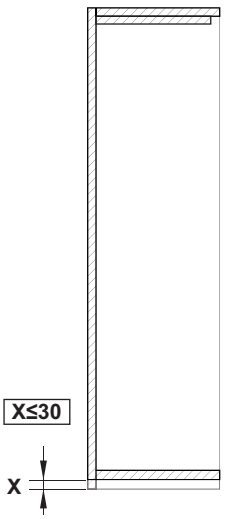

732.22.285
[WS494]
HDE 05.08.2026

4B

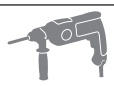
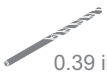

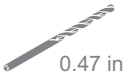




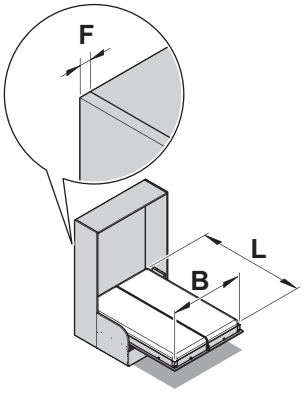

	B	L	A	C	D	W	Y	Z
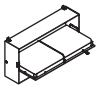	74.8	39.37/53.94	16.22	18.58	20.16	37.64	36.46	5.91
	78.74	39.37	16.22	18.58	20.16	39.61	38.43	5.91
	78.74	47.24	16.22	18.58	20.16	39.61	38.43	5.91
	78.74	55.12	16.22	18.58	20.16	39.61	38.43	5.91
	78.74	62.99	15.98	18.35	19.92	39.61	38.43	7.87
	78.74	70.87	15.98	18.35	19.92	39.61	38.43	11.81
	79.92	60.24	15.98	18.35	19.92	40.2	39.02	7.87
	53.94	74.8	16.22	18.58	20.16	27.2	26.02	11.81
	55.12	78.74	16.22	18.58	20.16	27.8	26.61	15.75
	60.24	79.92	15.98	18.35	19.92	30.35	29.17	15.75
	62.99	78.74	15.98	18.35	19.92	31.73	30.55	15.75
	70.87	78.74	15.98	18.35	19.92	35.67	34.49	15.75
	78.74	78.74	15.98	18.35	19.92	39.61	38.43	15.75
Service+	>39.37	-	16.97-F	19.33-F	20.91-F	B÷2+0.24	B÷2-0.94	-
	≤39.37	-	16.97-F	19.33-F	20.91-F	-	-	-
	35.43	78.74	16.22	18.58	20.16	-	-	15.75
	39.37	74.8	16.22	18.58	20.16	-	-	11.81
	39.37	78.74	16.22	18.58	20.16	-	-	15.75

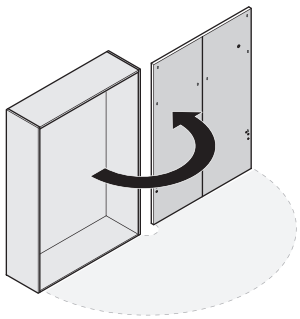

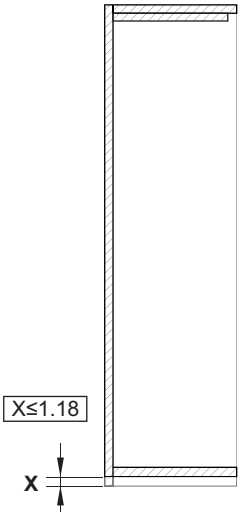

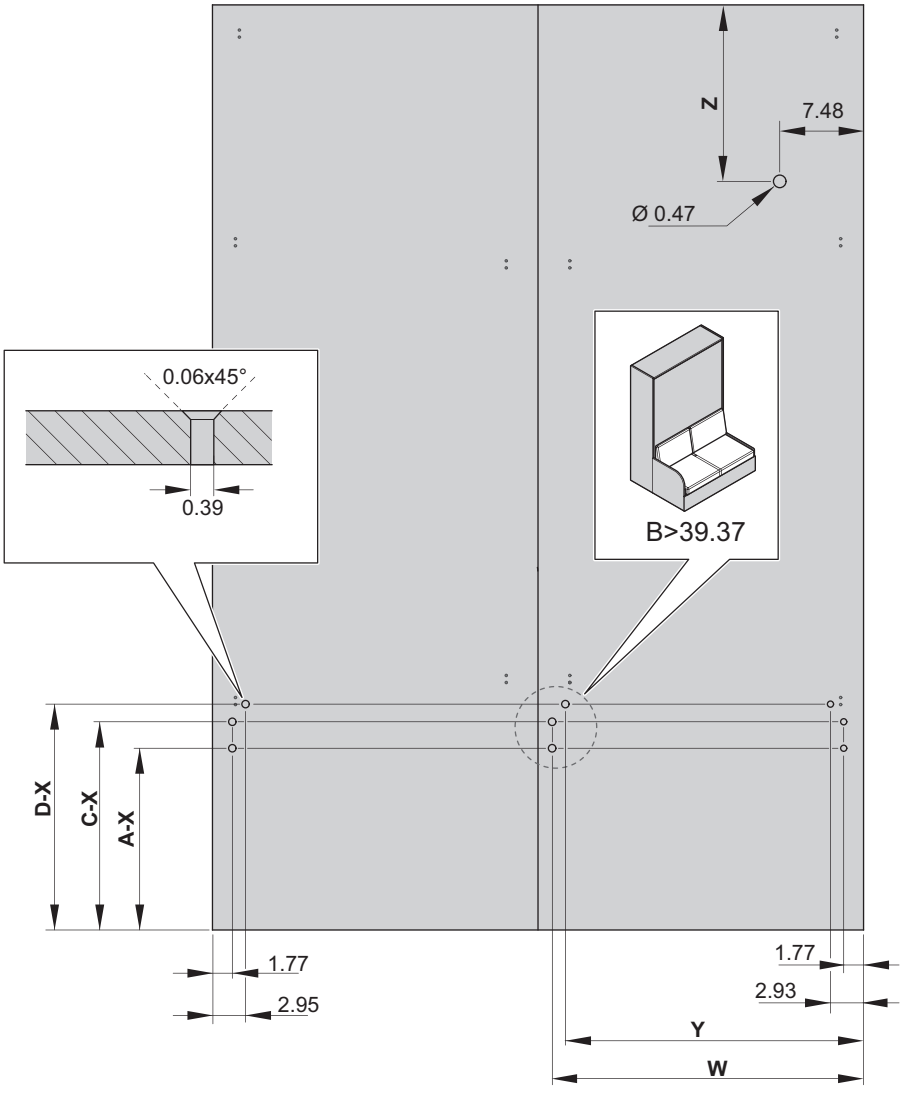

5

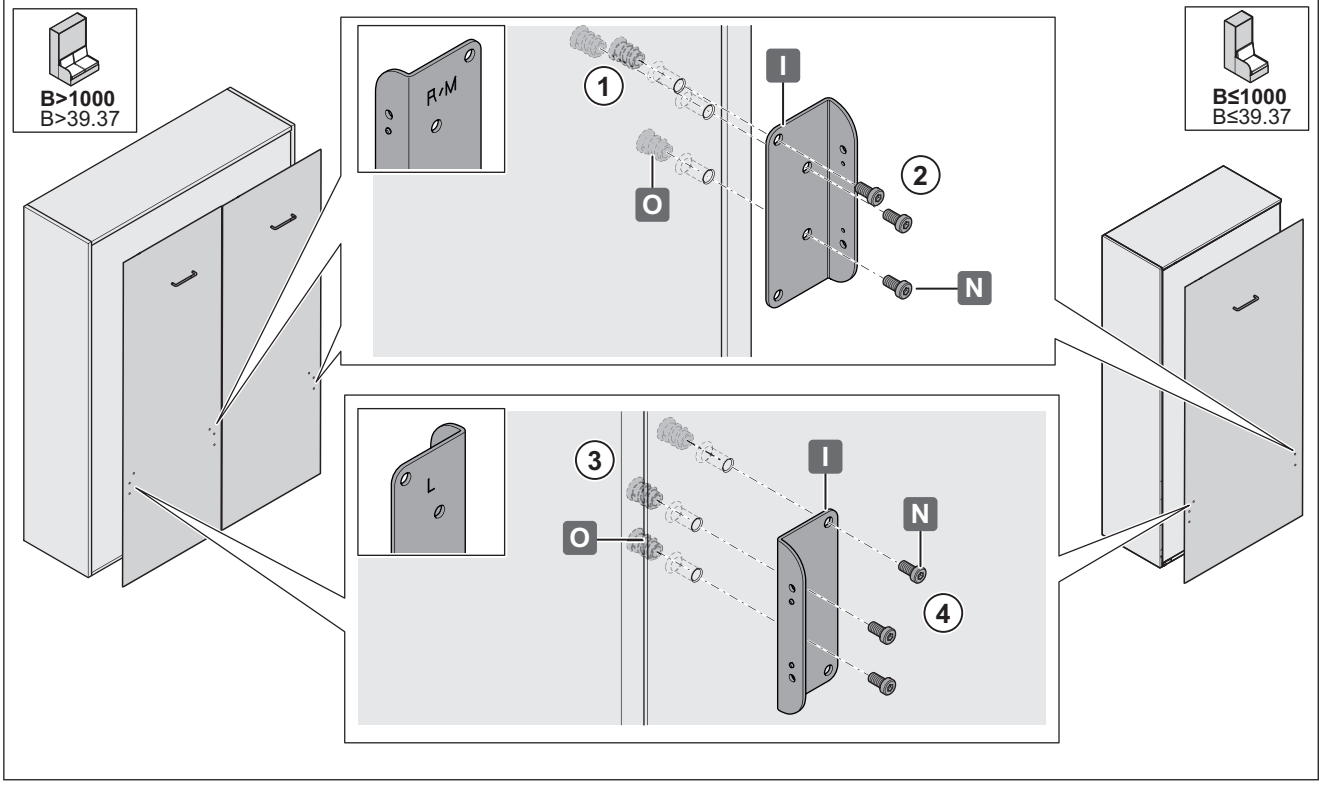
SW5
SW10
B>1000
B>39.37
B≤1000
B≤39.37
R/M
L
1
2
3
4
I
N
O

6

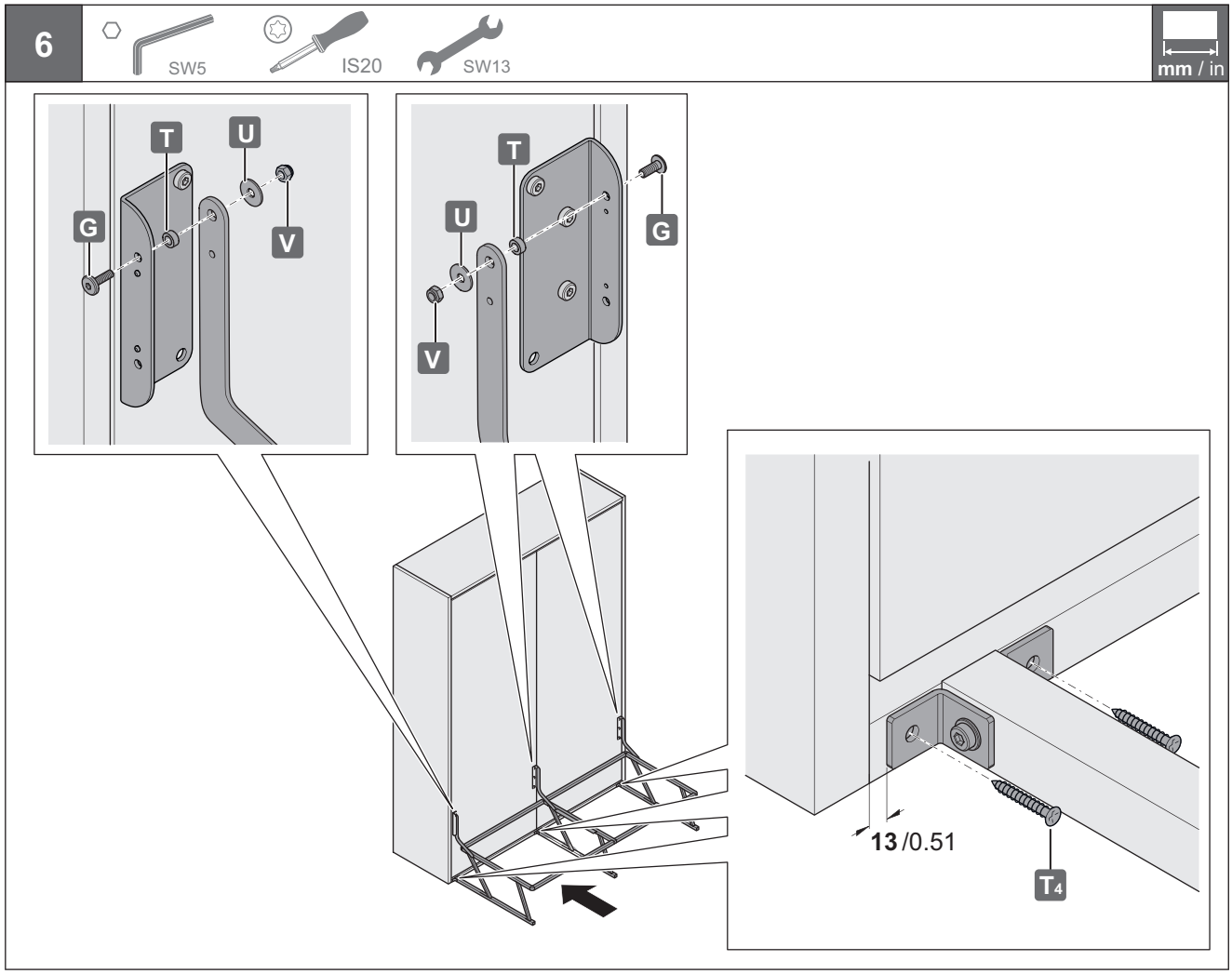
SW5
IS20
SW13
mm / in
T
U
G
V
13 /0.51
T4

7

IS20 SW6

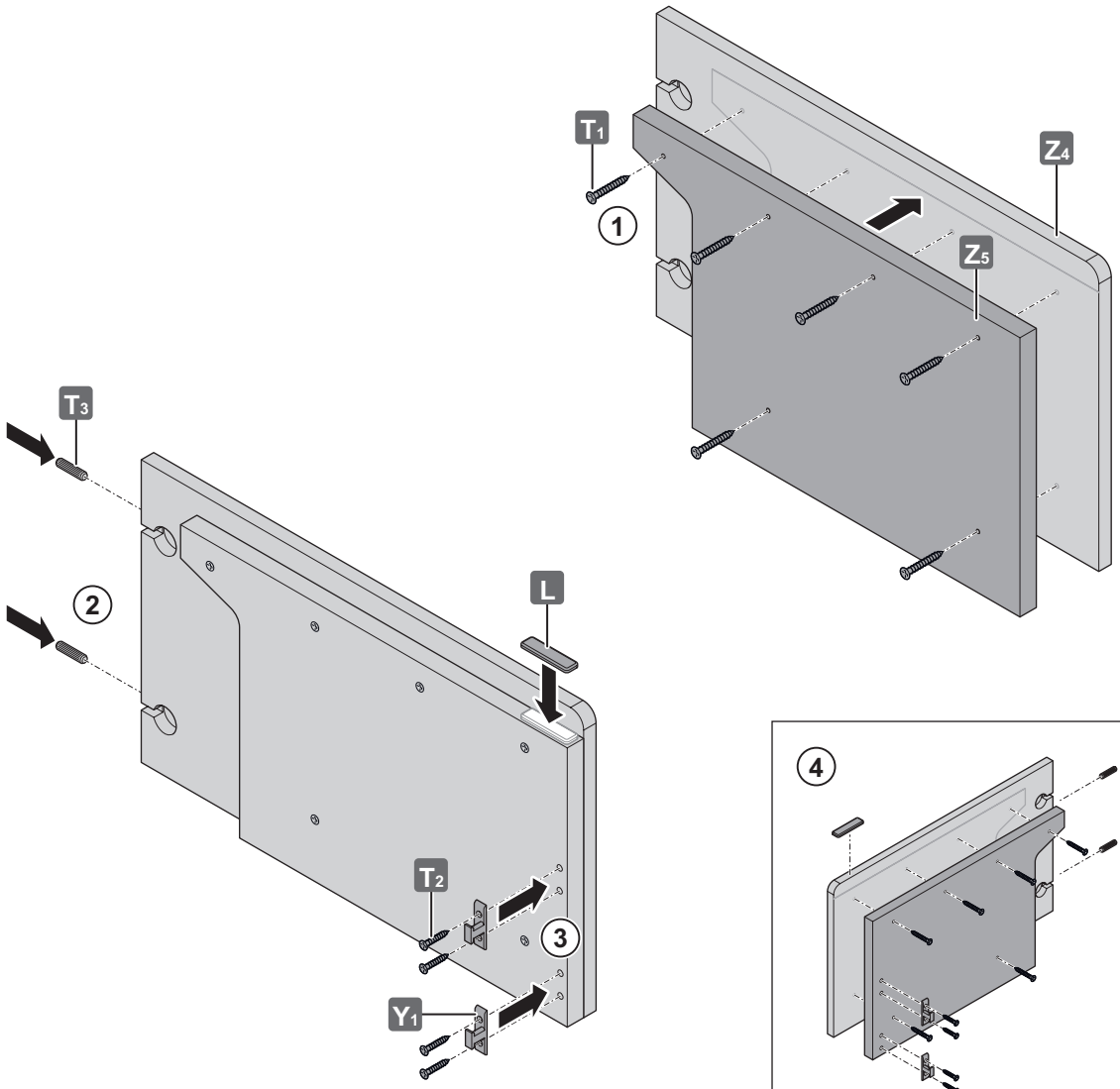

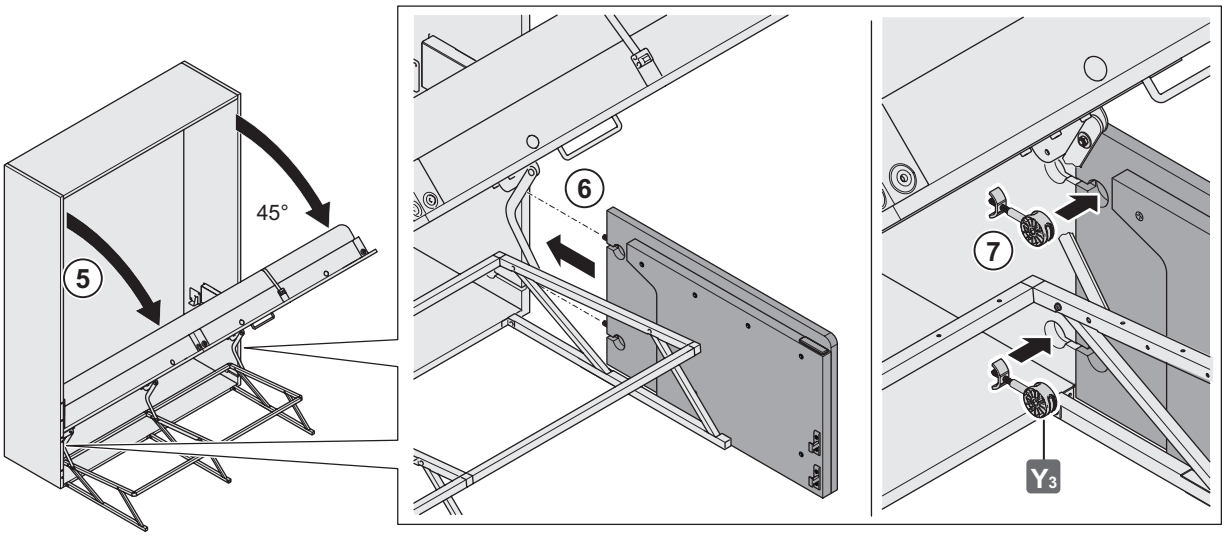

8

IS20

mm / in

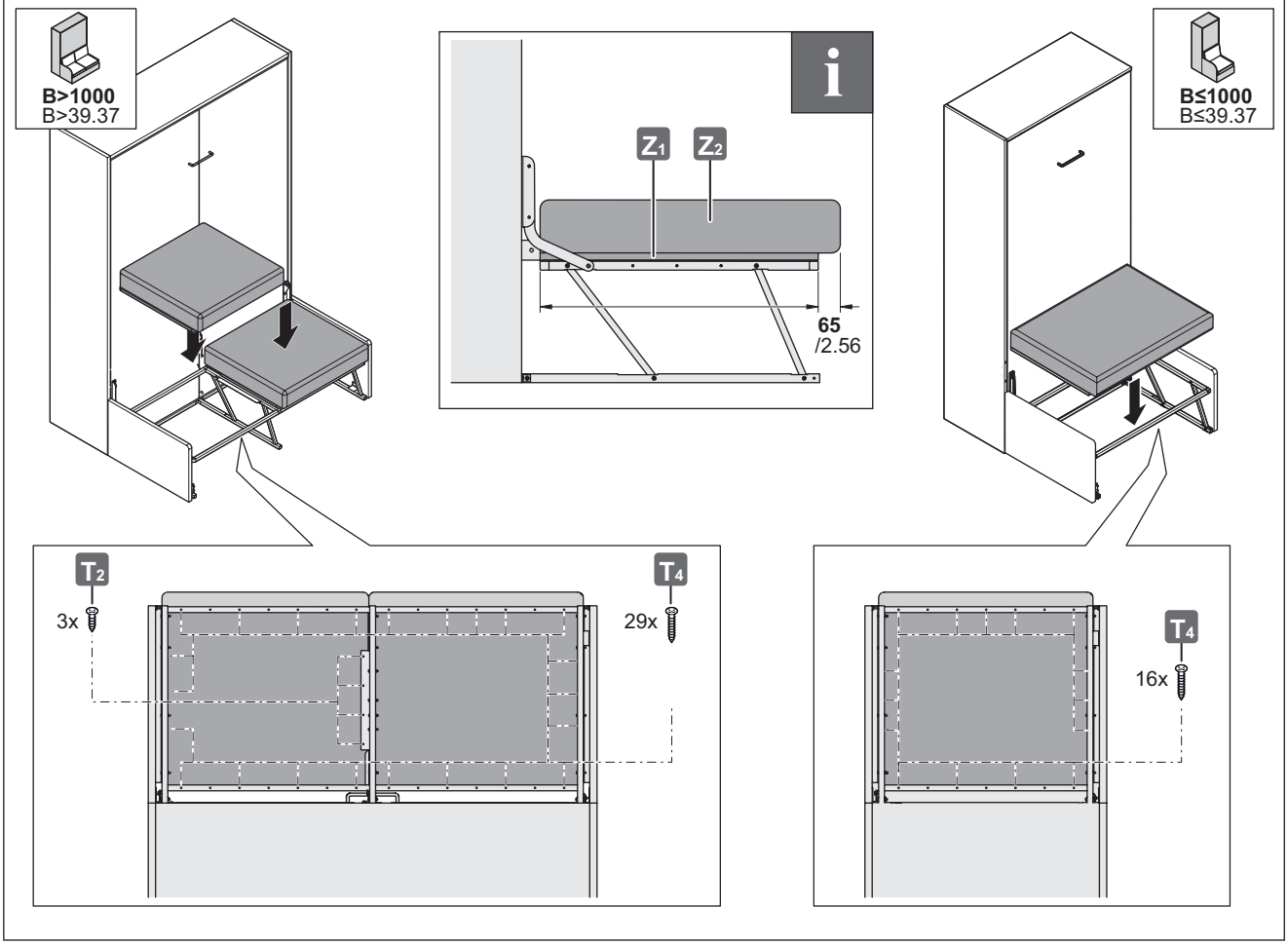

9

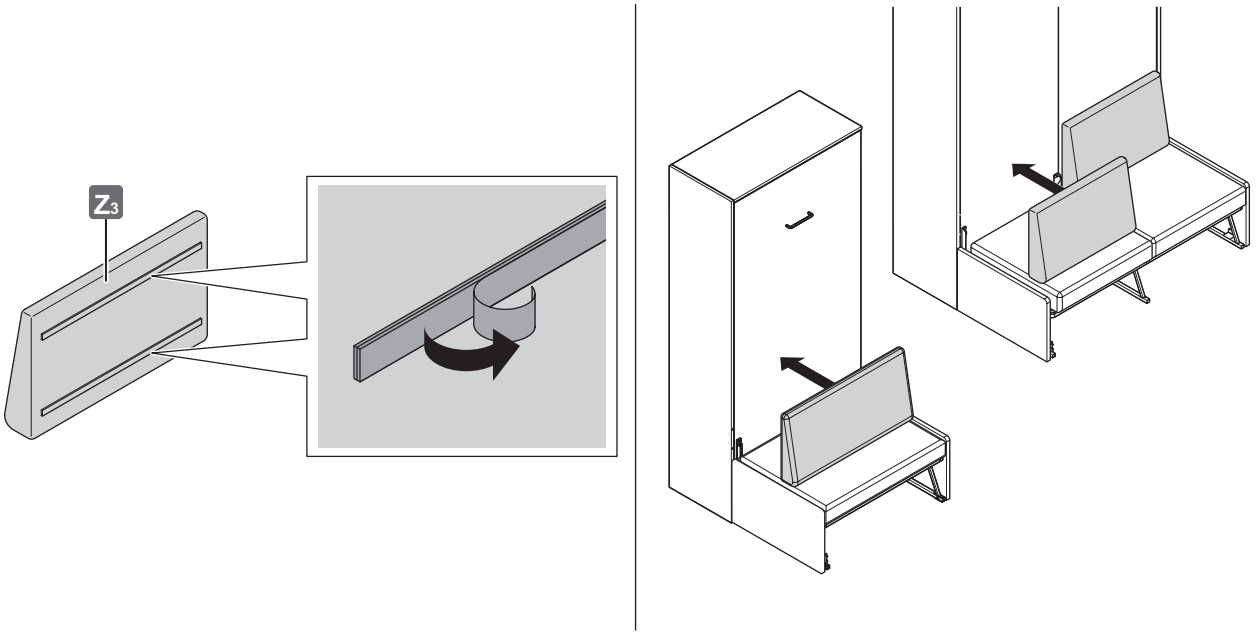

732.22.285
[WS494]
HDE 05.08.2026

10A

IS20

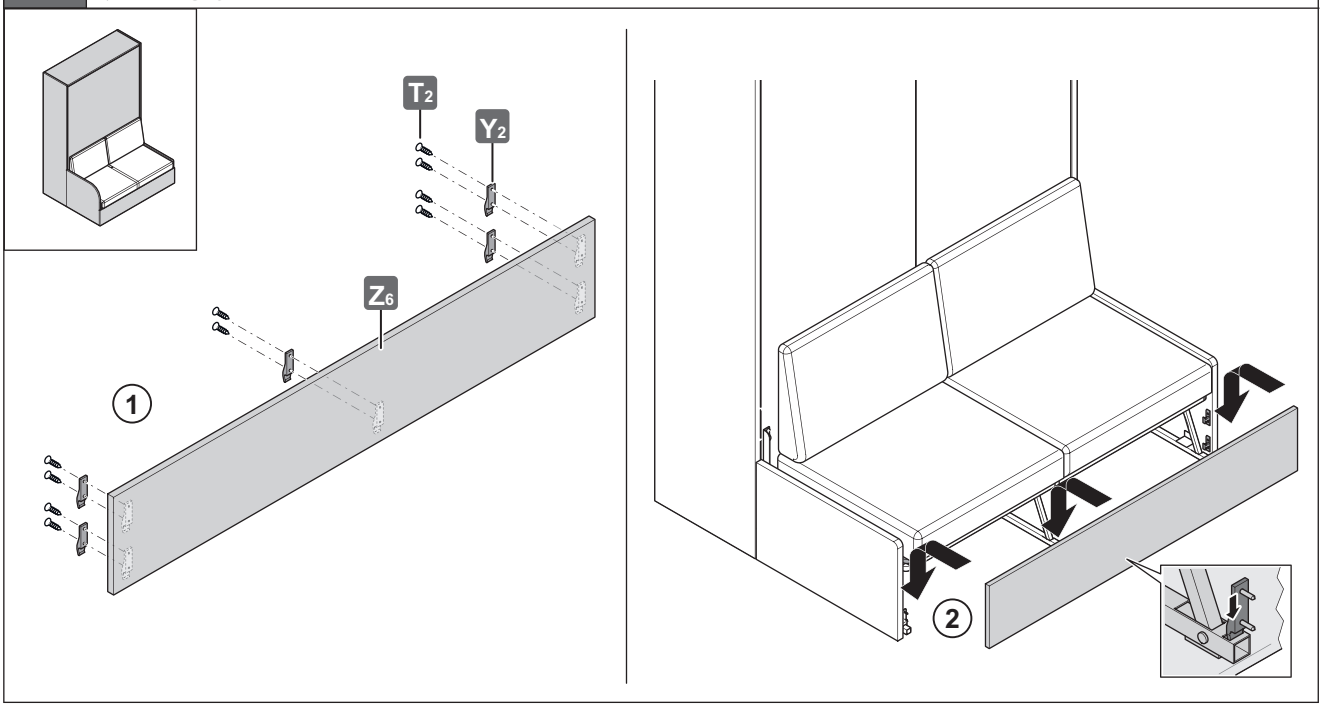

10B

IS20

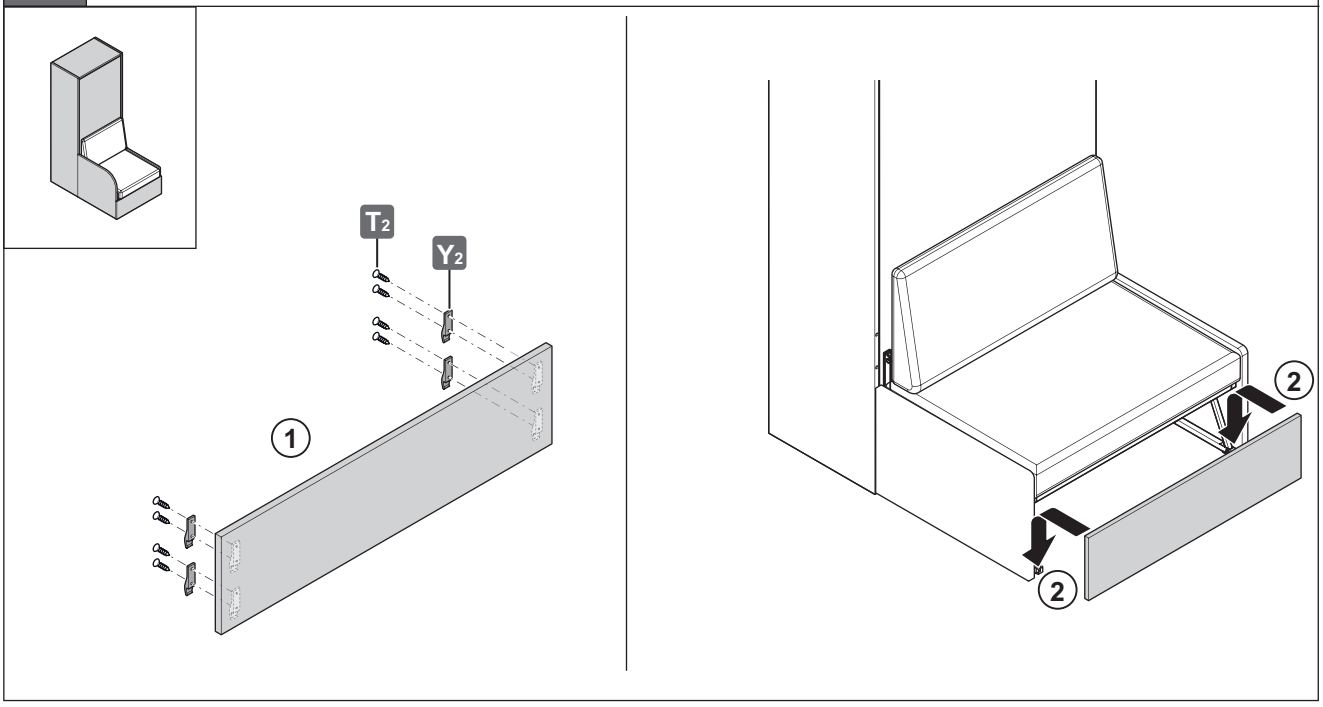

11

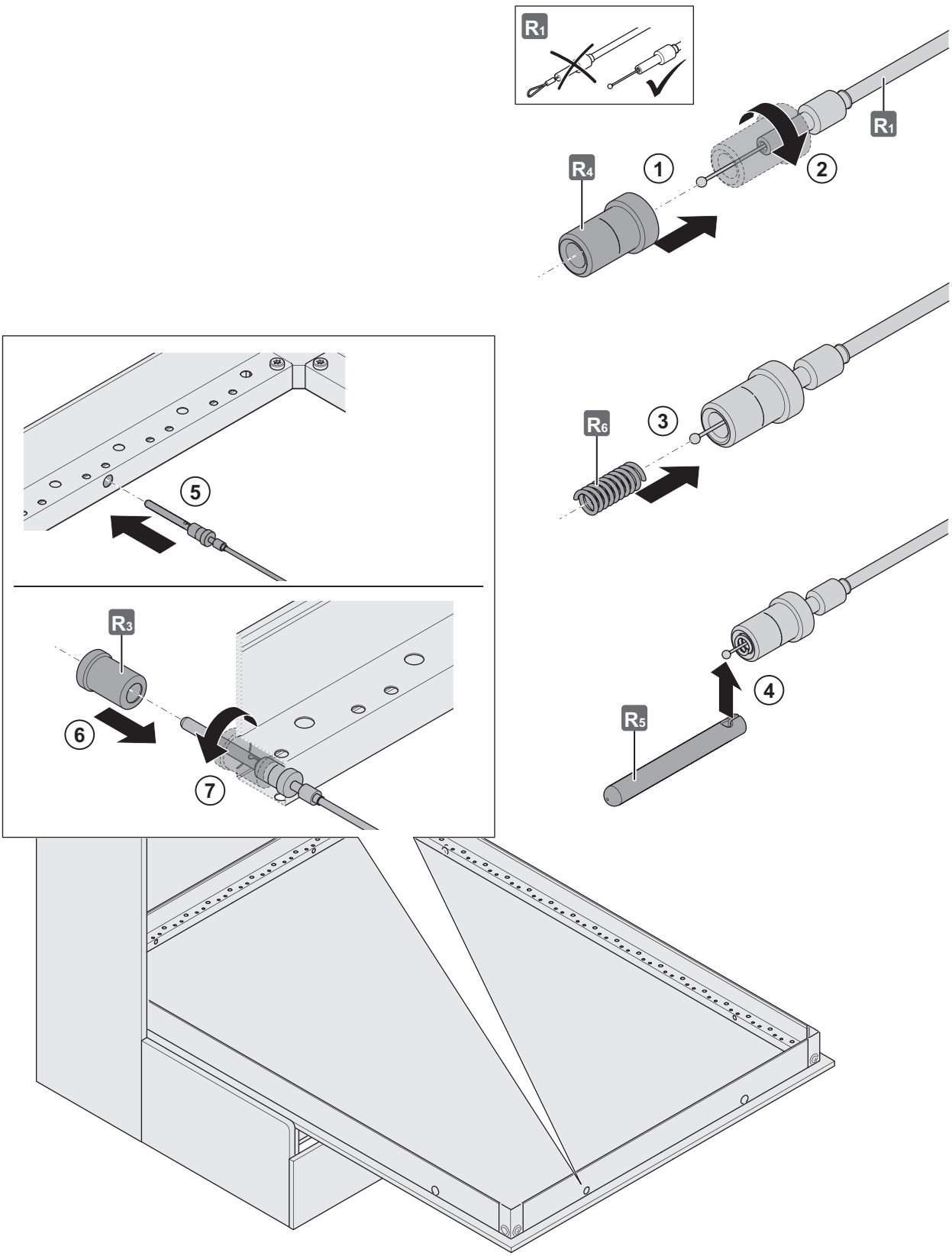

12

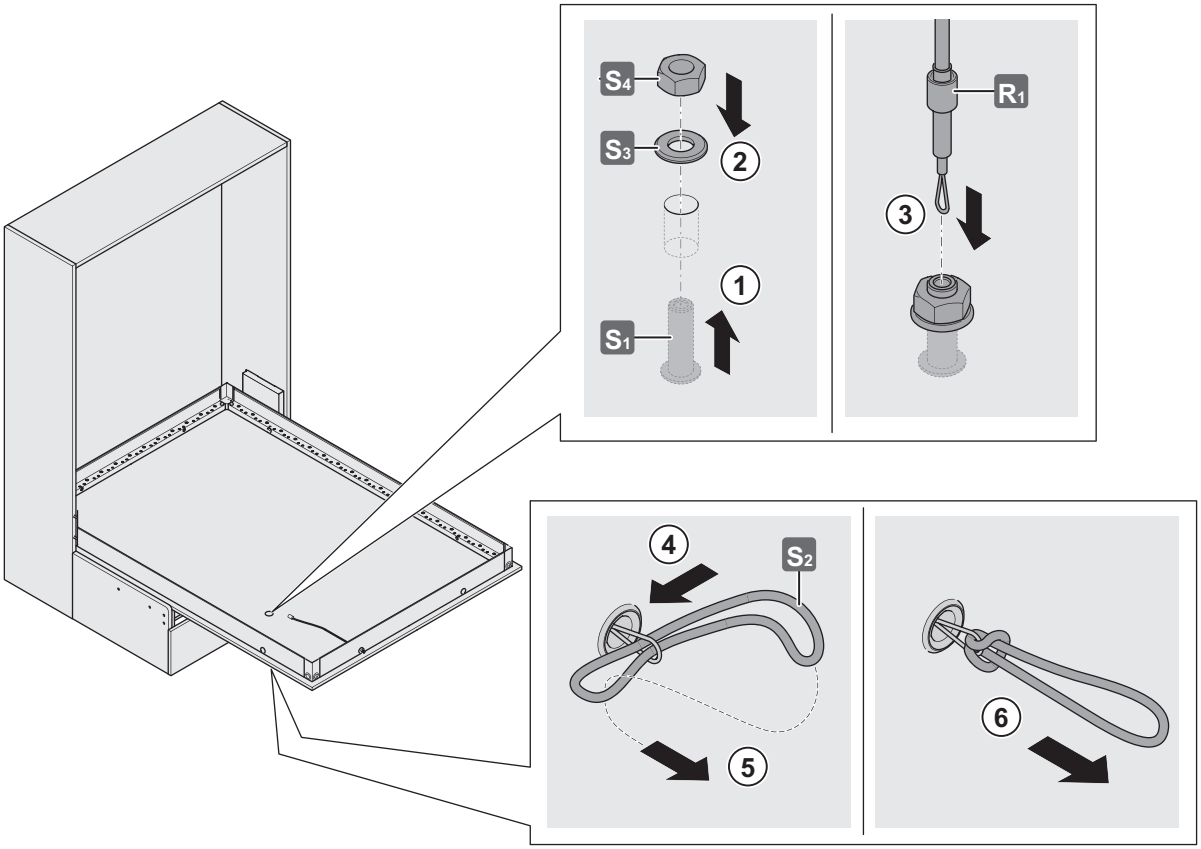

13

IS20

mm / in

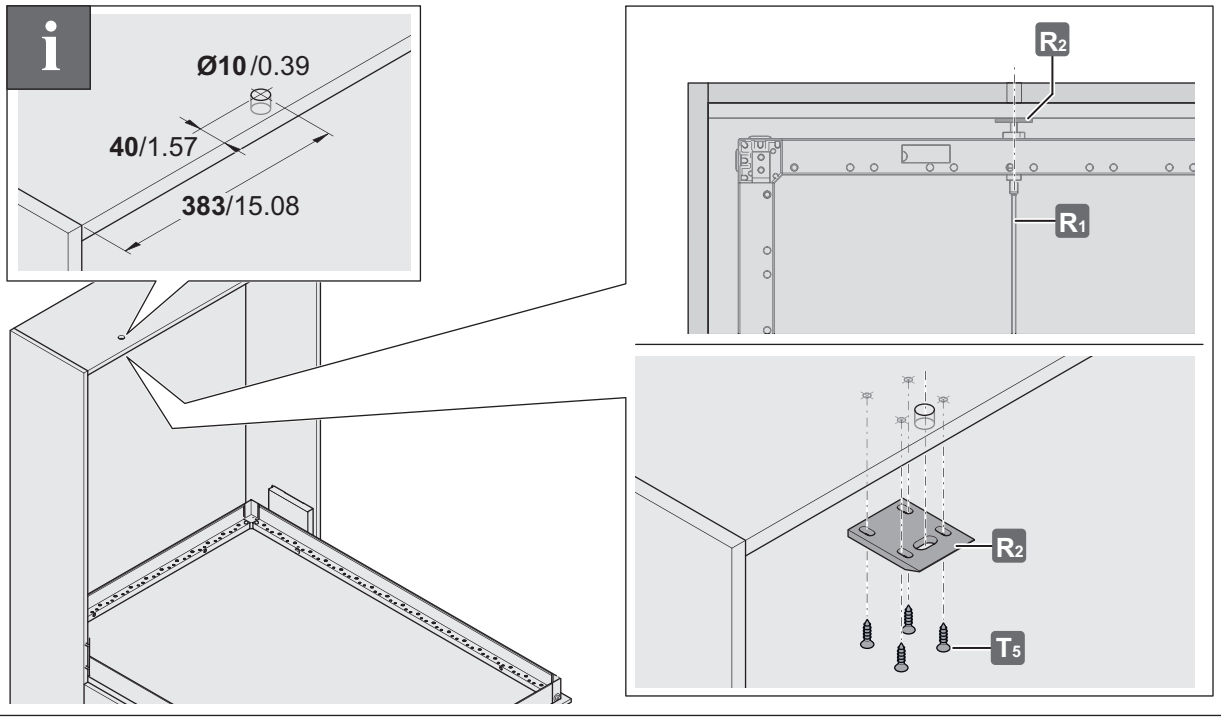

732.22.285
[WS494]
HDE 05.08.2026

Subject to alteration

© 2026 by Häfele SE & Co KG · www.hafele.com · info@haefele.de
Adolf-Häfele-Str. 1 · 72202 Nagold · Germany