HÄFELE

237.59.010 237.59.013
237.59.011 237.59.014

FT 200 / FT 200 CAP
FT 200cl / FT 200cl CAP

FT 200
FT 200 CAP

FT 200cl
FT 200cl CAP

	12 V System	mm	
237.59.010 237.59.011 237.59.013 237.59.014	12V DC	100x50x20mm	0-55°C

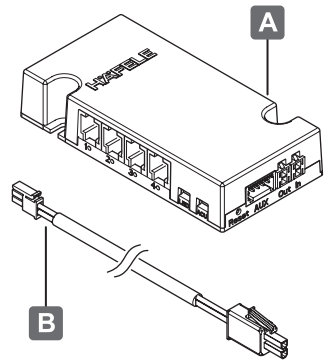

C 079.00.013

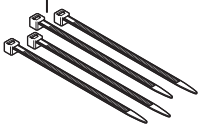

D 079.00.027

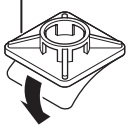

E

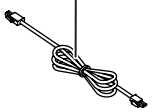

	m
823.28.327	2
823.28.351	5
823.28.360	10

„mm“

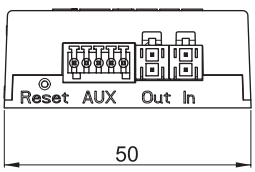

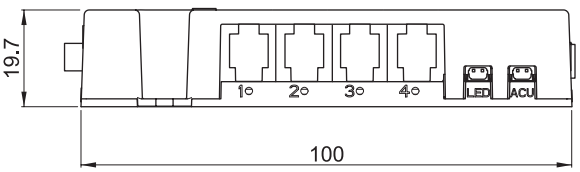

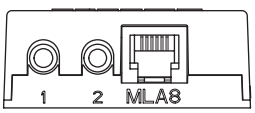

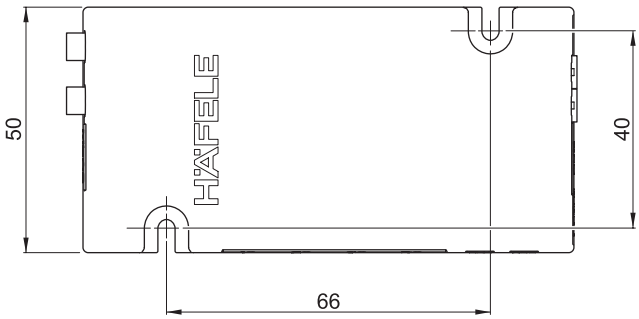

ZN 6.209.010.90e
732.22.025
[WS529]
HDE 23.07.2026

1

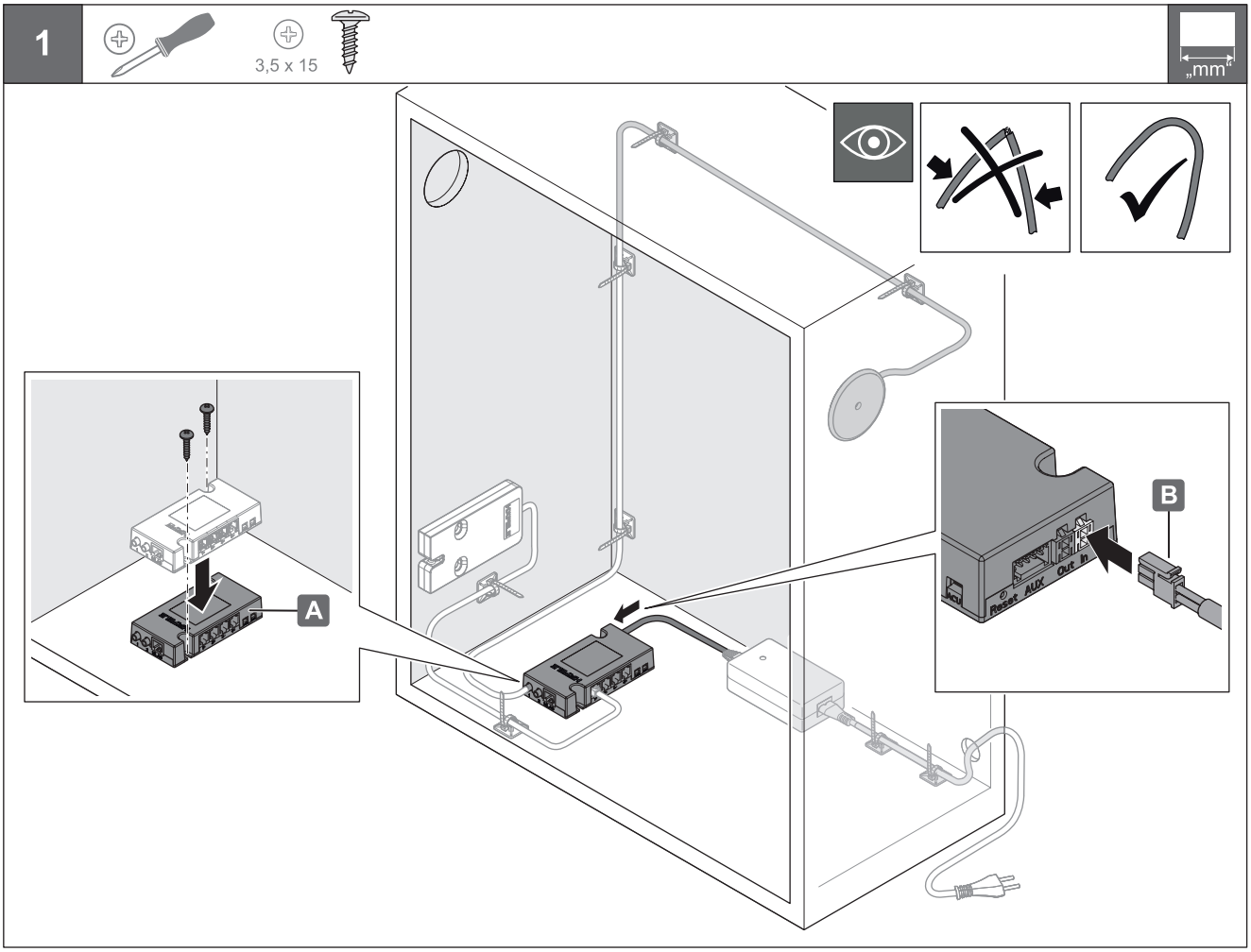

2

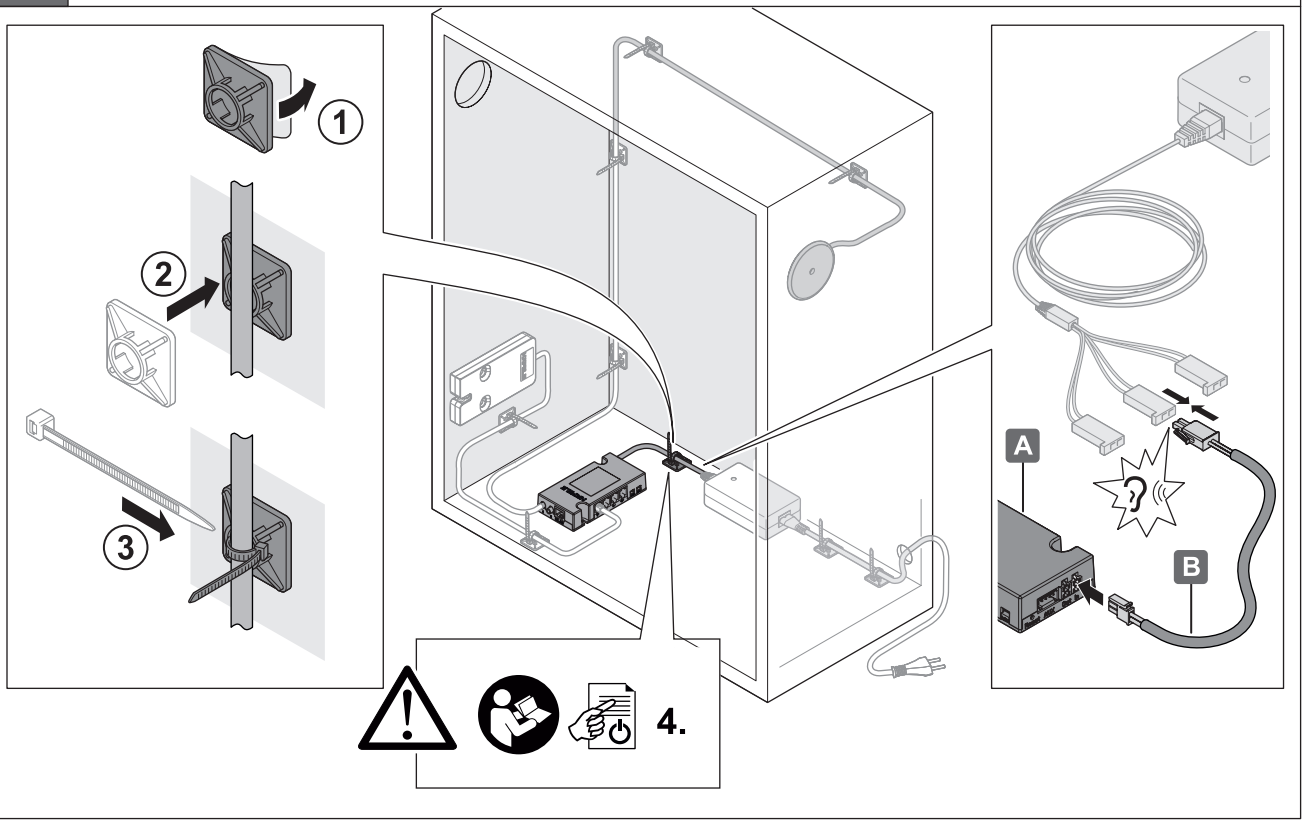

732.22.025

[WS529]

HDE 23.07.2026

Subject to alteration

© 2026 by Häfele SE & Co KG · www.hafele.com · info@haefele.de
Adolf-Häfele-Str. 1 · 72202 Nagold · Germany